# HN Lü-OR TD

## Vent Valve

with elastic seal and transportation lock

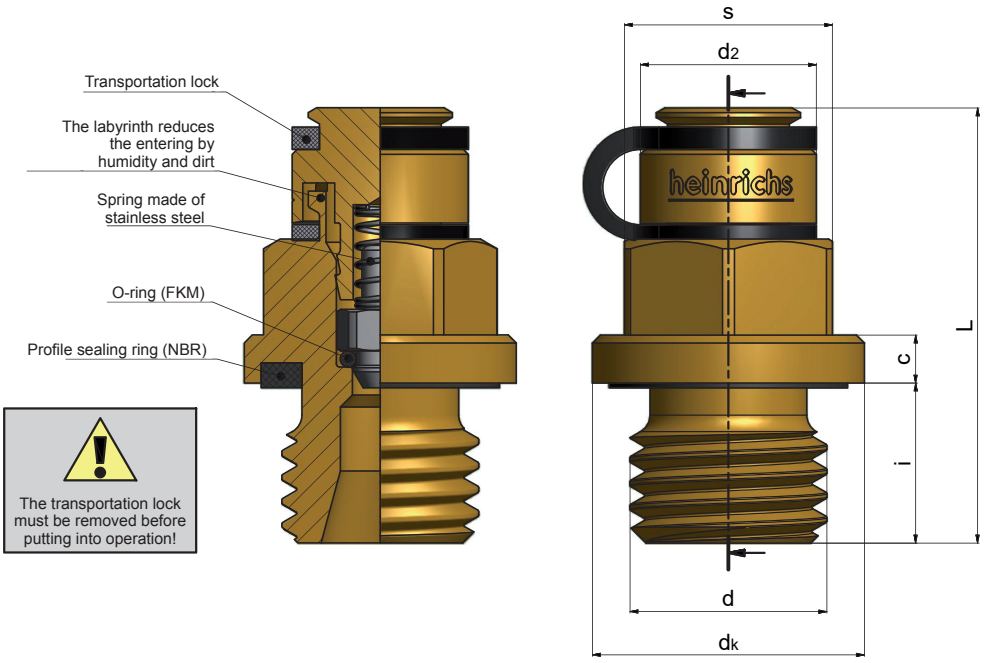


### Application areas:

- Electric geared motors with mineral oil filling
- For counter bores as per DIN 3852-2 and EN ISO 9974-1
- Can be undone and screwed in repeatedly

### Opening pressure:

- 0,015 MPa (0,15 bar) bis 0,03 MPa (0,3 bar)

### Range of temperature:

- -20°C to + 100°C (-4 F to + 212 F)
- Other temperature ranges upon request

### Mounting position:

- Upwards in a vertical position or horizontal above the oil level

### Material:

- Brass (CuZN38Pb2 /CuZn39Pb3)
- Stainless steel 1.4305
- Other materials upon request

### Coating:

- Standard = without coating

### Annotation:

- The use of Polyethylenglycol requires a technical check-back, please contact us

### Transportation lock:

- Prevents oil from leaking during transport

| d | | | c | $d_k$ | i | d2 | s | L |
|---|---|---|---|---|---|---|---|---|
| Metric fine thread DIN 13 | | Pipe thread DIN EN ISO 228 | ±0,2 | ±0,2 | ±0,2 | ±0,3 | h14 | ~ |
| M8 x 1 | — | — | 4 | 12 | 8 | 11 | 12 | 26,5 |
| M10 x 1 | — | G 1/8 A | 3 | 14 | 8 | 11 | 12 | 25,5 |
| M12 x 1,5 | — | — | 3 | 17 | 10 | 11 | 13 | 27,5 |
| — | — | G 1/4 A | 3 | 18,9 | 10 | 11 | 13 | 27,5 |
| M14 x 1,5 | — | — | 3 | 19 | 10 | 11 | 13 | 27,5 |
| M16 x 1,5 | — | G 3/8 A | 3 | 21,9 | 10 | 11 | 17 | 27,5 |
| M18 x 1,5 | — | — | 3,5 | 23,9 | 10 | 11 | 17 | 27,5 |
| M20 x 1,5 | — | — | 3,5 | 25 | 10 | 11 | 19 | 28 |
| — | — | G 1/2 A | 3,5 | 26,9 | 10 | 11 | 19 | 28 |
| M22 x 1,5 | — | — | 3,5 | 27 | 10 | 11 | 19 | 28 |
| M24 x 1,5 | — | — | 3,5 | 29,9 | 10 | 11 | 22 | 28 |
| M27 x 1,5 | M27 x 2 | G 3/4 A | 4 | 32 | 13 | 11 | 24 | 33,5 |
| M33 x 1,5 | M33 x 2 | G 1 A | 4,5 | 39 | 13 | 11 | 27 | 34 |
| M42 x 1,5 | M42 x 2 | — | 4,5 | 49 | 13 | 11 | 30 | 34 |