HN Lü-OR

Vent Valve

with elastic seal

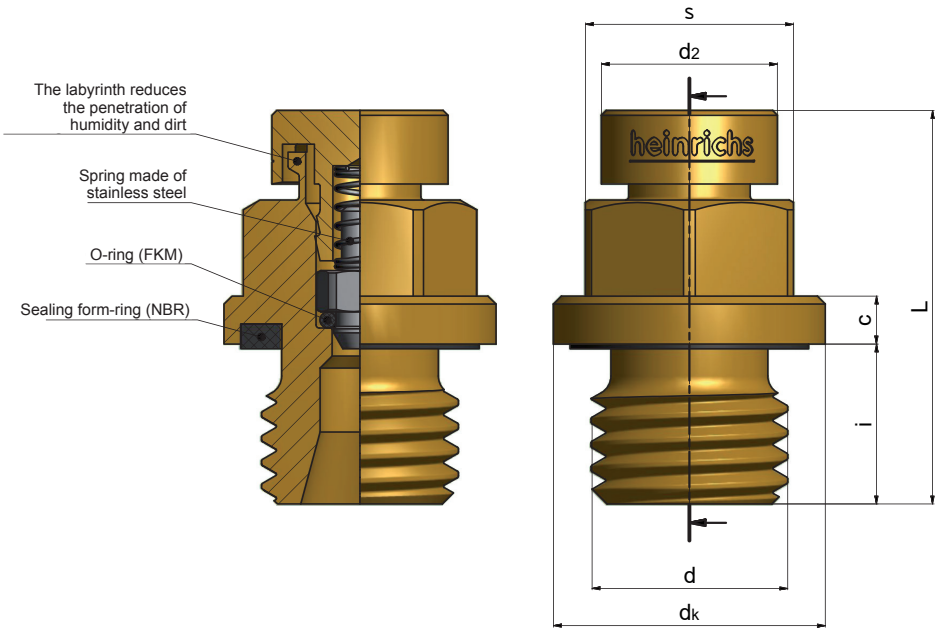

Application areas:

- Electric geared motors with mineral oil filling
- For counter bores as per DIN 3852-2 and EN ISO 9974-1
- Can be undone and screwed in repeatedly

Opening pressure:

- 0,015 MPa (0,15 bar) bis 0,03 MPa (0,3 bar)

Range of temperature:

- - 20°C to + 100°C (-4 F to + 212 F)
- Other temperature ranges upon request

Mounting position:

- Upwards in a vertical position or horizontal above the oil level

Material:

- Brass (CuZN38Pb2 /CuZn39Pb3)
- Stainless steel 1.4305
- Other materials upon request

Coating:

- Standard = without coating

Annotation:

- The use of Polyethylenglycol requires a technical check-back, please contact us

d			c	d_k	i	d2	s	L
Metric fine thread DIN 13		Pipe thread DIN EN ISO 228	±0,2	±0,2	±0,2	±0,3	h14	~
M8 x 1	—	—	4	12	8	11	12	24
M10 x 1	—	G 1/8 A	3	14	8	11	12	23
M12 x 1,5	—	—	3	17	10	11	13	25
—	—	G 1/4 A	3	18,9	10	11	13	25
M14 x 1,5	—	—	3	19	10	11	13	25
M16 x 1,5	—	G 3/8 A	3	21,9	10	11	17	25
M18 x 1,5	—	—	3,5	23,9	10	11	17	25
M20 x 1,5	—	—	3,5	25	10	11	19	25,5
—	—	G 1/2 A	3,5	26,9	10	11	19	25,5
M22 x 1,5	—	—	3,5	27	10	11	19	25,5
M24 x 1,5	—	—	3,5	29,9	10	11	22	25,5
M27 x 1,5	M27 x 2	G 3/4 A	4	32	13	11	24	31
M33 x 1,5	M33 x 2	G 1 A	4,5	39	13	11	27	31,5
M42 x 1,5	M42 x 2	—	4,5	49	13	11	30	31,5